A0060
Shear Valve

ATEX & UL Approved

- **Beefier Castings for Rugged Reliability**
- **Mounting Bolts Included**

Stainless Steel Versions for E85, DEF, Ultra Low Sulfur Diesel & Biodiesel Blends up to B100

EMCO WHEATON RETAIL CORPORATION

2300 Industrial Park Drive • Wilson, North Carolina 27893
252-243-0150 • 252-243-4603 (fax) • www.emcoretail.com

A0060

Emergency Shear Valve

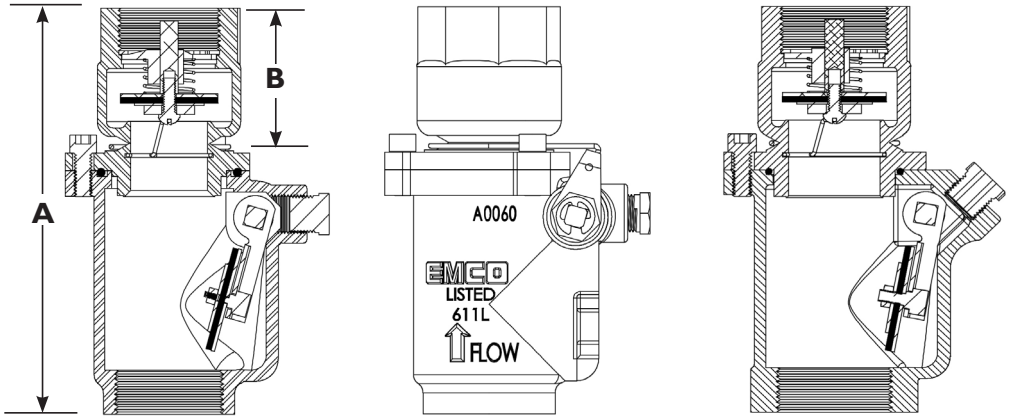

Stainless Steel

Cast Iron

Materials

Body: Cast Iron or Stainless Steel
Spring: Stainless Steel
Seal: Viton®

Viton® is a registered trademark of The Chemours Company

Approvals

UL MH6518 UL LISTED 611L

ATEX FTZÚ 14 ATEX 0204 Ex

Guide Specification: Emergency shut off valve for installation under gasoline dispensing units. Incorporates a replaceable shear section and a heat sensitive fusible link assembly. Valve can be manually operated to facilitate dispenser maintenance and incorporates a 3/8" test port. Closing poppet assembly is positioned out of the fuel flow path to minimize pressure drop. The A0060 utilizes a standard three boss mounting arrangement. Available in single poppet and double poppet configurations. Cast iron versions are powdered coated.

Model No. Cast Iron	Model No. Stainless Steel	Description	Inlet	Outlet	Cast Iron Lbs.	SST Lbs.	A	B
A0060-002	A0060-002S	1 1/2" Single Poppet	Female	Male	5.7	6.4	6.9"	2.2"
A0060-003	A0060-003S	1 1/2" Single Poppet	Female	Female	5.6	6.3	6.7"	1.7"
A0060-015	A0060-015S	1 1/2" Single Poppet	Female BSPT	Male BSPT	5.7	6.4	7.9"	3.2"
A0060-016	A0060-016S	1 1/2" Single Poppet	Female BSPT	Female BSPT	5.6	6.3	6.9"	2.2"
A0060-022	A0060-022S	1 1/2" Double Poppet	Female	Male	5.8	6.7	7.9"	3.2"
A0060-023	A0060-023S	1 1/2" Double Poppet	Female	Female	5.7	6.4	6.9"	2.2"
A0060-025	A0060-025S	1 1/2" Double Poppet	Female BSPT	Male BSPT	5.8	6.7	7.9"	3.2"
A0060-026	A0060-026S	1 1/2" Double Poppet	Female BSPT	Female BSPT	5.7	6.4	6.9"	2.2"

Replacement Parts

Part No. Cast Iron	For Use On	Part No. Stainless Steel	For Use on	Description	Outlet	Cast Iron Lbs.	SST Lbs.
492938	A0060-002	492938S	A0060-002S	1 1/2" Replacement Top; 1 Poppet	Male	2.2	2.5
492939	A0060-003	492939S	A0060-003S	1 1/2" Replacement Top; 1 Poppet	Female	2.3	2.6
493885	A0060-016	493885S	A0060-016S	1 1/2" Replacement Top; 1 Poppet	Female BSPT	1.4	1.6
493886	A0060-015	493886S	A0060-015S	1 1/2" Replacement Top; 1 Poppet	Male BSPT	1.6	1.8
493887	A0060-022	493887S	A0060-022S	1 1/2" Replacement Top; 2 Poppets	Male	2.7	3.0
493888	A0060-023	493888S	A0060-023S	1 1/2" Replacement Top; 2 Poppets	Female	2.7	3.0
493889	A0060-025	493889S	A0060-025S	1 1/2" Replacement Top; 2 Poppets	Male BSPT	1.6	1.8
493890	A0060-026	493890S	A0060-026S	1 1/2" Replacement Top; 2 Poppets	Female BSPT	1.6	1.8
492963K				Fusible Link Kit		0.2	
564036				Control Arm			
A0065-001				A0060 Stabilizer Bar Mounted Kit		3.8	

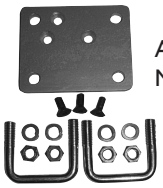

A0065
Mounting Kit

Emco Wheaton Retail Corporation
2300 Industrial Park Drive • Wilson, North Carolina 27893
252-243-0150 • 252-243-4603 (fax) • www.emcoretail.com

© 2020 Emco Wheaton Retail Corporation