A1004EVR-317S
Double Wall Poly/Poly Spill Containment

Specifications
- Replaceable; easily repair or replace primary & secondary units from grade without breaking concrete
- 5 gal capacity
- Screw on
- Weights: Lid 15.9 lbs, Total: 80 lbs

Materials
- Cast iron rim
- Cast iron water-resistant lid, built-in handle & exclusive triple wiper seal

Application
- Grade level
- Installs 16” on center

Components
- EZ-Gage to monitor interstitial space at a glance
- Removeable drain plug

Approvals
- Phase I EVR Executive Order VR-105
- ULC Listed MH21149
- FL DEP # EQ-741
- NC DENR
- MO DNR
- Lid meets H20 Load Rating

Color Variant Part Numbers

Model No.	Rim/Lid	Adapter/Cap
A1004EVR-317S	Black	N/A
A1004EVR-317S-D	Yellow	N/A
A1004EVR-317S-R	White	N/A
A1004EVR-317S-U	Red	N/A
A1004EVR-317SV	Black	Vapor*
A1004EVR-317SV-V	Orange	N/A
A1004EVR-317SX	Black	Fill**
A1004EVR-317SX-D	Yellow	Fill**
A1004EVR-317SX-R	White	Fill**
A1004EVR-317SX-U	Red	Fill**

*Includes A0076-124S Vapor Swivel Adapter & A0099-002 Vapor Cap
**Includes A0030-124S Fill Swivel Adapter & A0097-005 Fill Cap

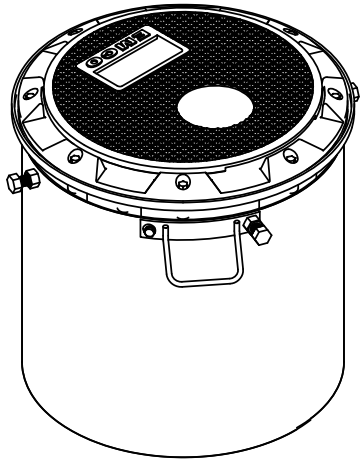

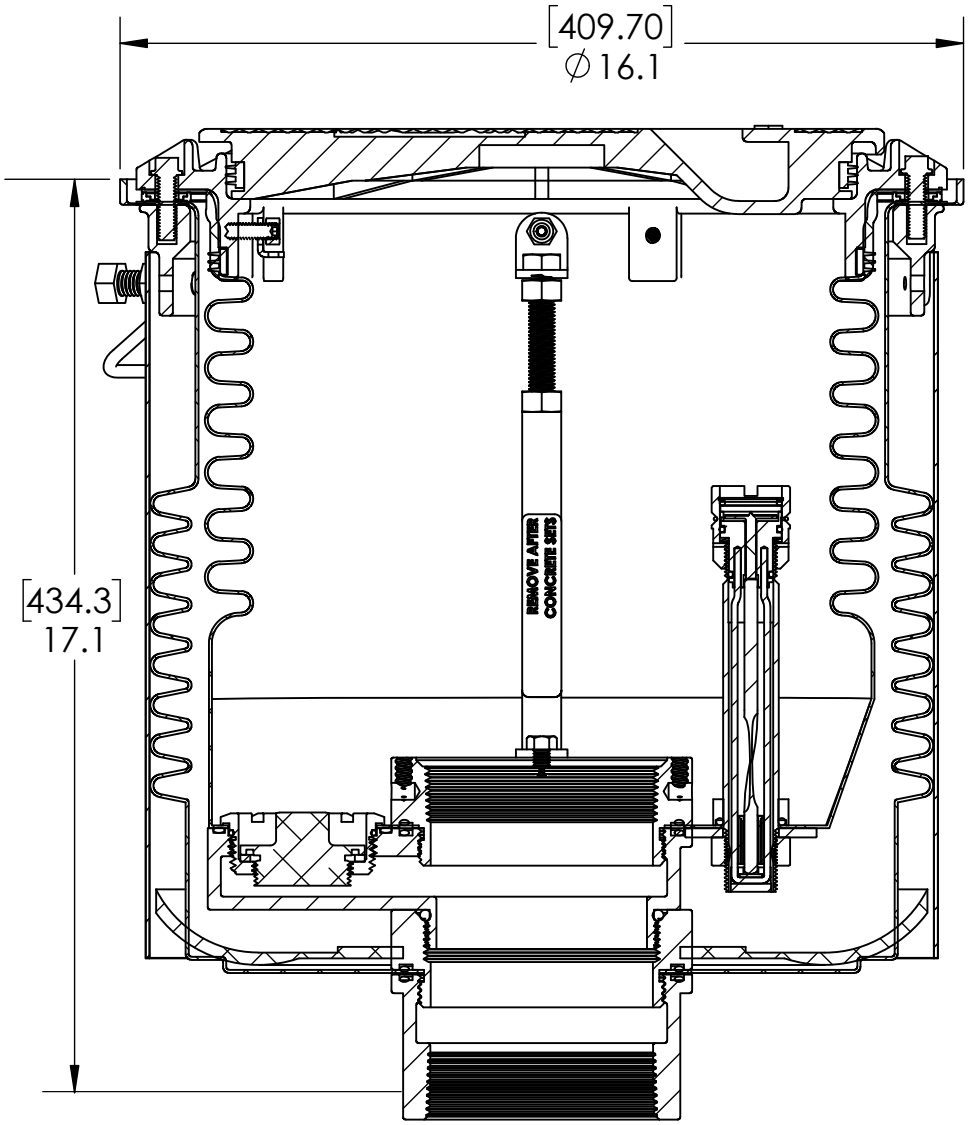

EMCO WHEATON RETAIL

EMCO WHEATON RETAIL CORPORATION
2300 INDUSTRIAL PARK DRIVE
WILSON, NC 27893

DO NOT SCALE DRAWING-WORK TO DIMENSIONS SHOWN
DIMENSIONS ARE IN INCHES (DIMENSIONS IN BRACKETS ARE IN MILLIMETERS)

SYM	REVISIONS	DATE	BY

UNLESS OTHERWISE SPECIFIED
DECIMALS: .X ± .030 .XX ± .015 .XXX ± .005 ANGLES: ± 1°
CASTING TOLERANCES TO INDUSTRY STANDARDS MACHINED SURFACES 125 RMS REMOVE ALL BURRS

THE INFORMATION AND DESIGN DISCLOSED BY AND THE COPYRIGHT IN THIS DRAWING ARE THE PROPERTY OF EMCO WHEATON RETAIL CORP. AND CANNOT BE USED WITHOUT WRITTEN PERMISSION.

DRAWN BY: NPC	DATE: 1/6/2016	USED ON	
CHECKED BY	DATE	PROJECT NUMBER	
APPROVED BY	DATE	SCALE: N/A	WEIGHT
MATERIAL: SEE NOTE		CASTING NUMBER	

PART NAME: DOUBLE WALL EVR SPILL CONTAINMENT NO DRAIN

SIZE	DRAWING NUMBER	PAGE	REV
A	A1004EVR-317S	1 OF 1	B