Emergency Shear Valves

A0063EVR Vapor Shear Valve

Material
Body: Cast Iron
Spring: Stainless Steel
Seal: Viton®

Viton® is a registered trademark of DuPont Dow Elastomers.

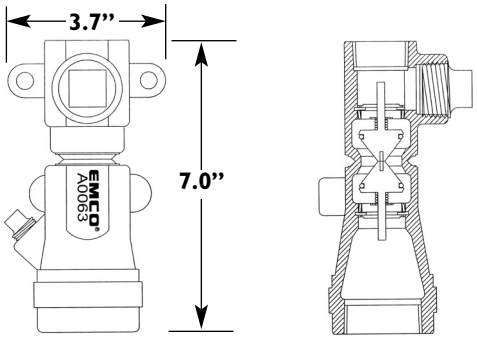

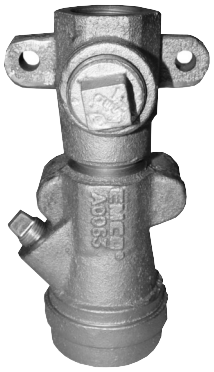

■ ULC Listed MH10206

The Emco Wheaton A0063EVR Vapor Shear Valve installs on vapor recovery lines under the dispenser to eliminate the escape of vapors in the event of a collision to the dispenser. The double poppet valve incorporates a 1.5” female NPT connection to the underground piping and a 1” female NPT connection to dispenser piping. The valve incorporates a 3/8” test port. The A0063EVR is approved for use with all CARB certified pre-EVR and EVR Phase II vapor recovery systems. Includes 5 anchoring bolts, washers and nuts. Does not include plate or U-bolts. If required, order the A0065-001 Mounting Kit, below.

Model No.	Description	Inlet	Outlet	Lbs.
A0063EVR-024	1 1/2” Double Poppet	Female	Female	5.2

A0065 Mounting Kit

The Emco Wheaton A0065-001 Mounting Kit is used to mount the A0060 and A0063 to the dispenser pan stabilizer bar. The kit includes 2 U-bolts, 4 lock washers, 4 hex nuts, 3 flat head cap screws and mounting plate. Weighs 3.8 lbs.

To order the A0065 Mounting Kit with the A0060 Shear Valve, replace the first digit of the variant number with a 1. Example: A0060-102, single poppet male with mounting kit.

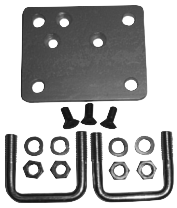

495645 Mounting Kit

The Emco Wheaton 495645 Mounting Kit is used to mount the A0060 directly to the Unistrut™. The kit includes 1 mounting bracket, 3 flat head cap screws, 2 bolts and 2 Unistrut™ channel nuts. Weighs 1.3 lbs.
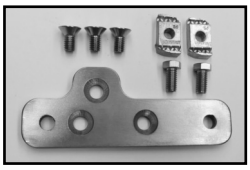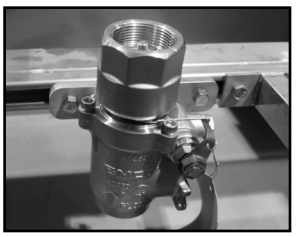
Unistrut™ is a trademark of Unistrut Corporation